TRAINING IN SEA SAFETY DEVELOPMENT PROGRAMME

P. Raghu Ram
National Consultant
Radio Communication

The use of radio transceivers at sea and on land for cyclone warnings

The Food and Agriculture Organization of the United Nations conceived the Project "Training in Sea Safety Development Programmes" as a result of high loss of life amongst fisherfolk in the November 1996 cyclone, in East Godavan District. The project is focussing its efforts on reducing the loss of life amongst fisherfolk, through a community developed contingency plan of action in thirty villages and demonstrating the technology available, such as providing VHF Radio Communication systems. Lifefloats and Diesel Engines for Navas.

The radio transceivers are the telecommunications equipment with which voice messages can be transmitted and received without the conventional telecommunication wires, poles, exchange, equipment, etc. Thus the radio transceivers are more operationally suitable for land where there exists difficult terrain and accessibility and are also more suitable for sea applications. These transceivers are available in fixed and mobile versions.

The radio transceivers are available in different frequency bands and can be classified in three categories:

1. **Short range communication**: Wherever the range of communication is up to 50 km aerial distance where VHF and UHF radio transceivers are ideal and suitable. Here the communication is feasible wherever there is a line of site is available from the point of transmission to the reception and antennae. Generally the land and mobile versions the power out put of the transceivers will be up to 25 W. International marine frequency band allotted for the purpose is 156 to 163 MHz. The type of Antenna used for the land application is GP antennae up to to 3 dB gain. The mobile application, antenna is a whip type with 0 dB gain. The VHF radio transceiver transmission/reception will be in the frequency modulation mode, which is very less prone to external interferences, thereby the receptions will be clearer than other types of modulation.

2. **Medium Range Communication**: The range of communication is between 15 to 250 km aerial distance. The radio transceivers operating in-MF (300 KHz to 1.6 MHz). The power output will be up to 1000 W. This radio equipment is used on large ships and port stations for transmission of radio telegraphy. Also the low power high frequency radio transceivers operating in frequency 1.6 to 30 MHz are used. These radio transceivers are for capacities of power up to 50 W. This radio equipment transmission and reception will be in AM (SSB) and mostly used wherever there is no line of site but the communication is required up to a range of 50 – 150 km.

3. **Long range communication**: The range of communication is up to 3 000 km with high power (1 000 W) transmission. The receivers are very sensitive with double super heterodyne receivers. The quality of reception is generally good during the day as compared to night time. The radiated power with RF signal is reflected through the ionospheric layer reflection. This is also known as sky wave communication using AM (SS13). Most of the land based communication stations such as airports, defence, police-networks are equipped with this type of system. The FIF radio transceivers are linked with EF dipole antenna and wherever site limitations are there they are connected with log periodic antenna.

If we consider the wide area coverage such as that of a state in a country such as India for dissemination of cyclone warnings the combination of HF and VHF would be the ideal. This is in order to have a voice communication link between the capital of the state to the remote coastal regional headquarters level. The HF transceivers with 100 W power output and broadband antenna working in the frequency range 1.6 to 30 MHz should be used. A VHF radio link should be established from the coastal regional headquarters to the coastal villages and the shore stations. This can be further extended through these VHF shore stations to the mobile VHF sets installed on the mechanized fishing vessels. Thus a cyclone-warning message originated from the state capital is disseminated to the remotest village and even to the mechanized fishing vessel in the sea almost instantaneously.

Under the FAO project "Training in Sea Safety Development Programme" two VHF shore stations were established at Kakinada and Balusutippa in East Godavan District of Andbra Pradesh, and at the shore station two

25W VHF transceivers were installed to operate on channel 15 and 16 (Internal maritime channel). The radio equipment is powered through a DC regulated power supply unit with stand by batteries. The shore stations are designed to operate and function 24 hours a day basis throughout the year. The shore stations are have trained shore operators who will be receiving and transmitting the messages for the following purpose:

1. Life safety of fishers when they are at sea;
2. Periodic broadcast of the weather forecast;
3. Transmittal of cyclone warning message well in advance for the fishing community (land and sea);
4. Coordination of search and rescue operation in case of any emergency at sea.

Channel 15 and 16 were allotted by the wireless planning and coordination cell of the Ministry of Communications, Government of India, for the two shore stations and to the boat operators in bulk. (150 boats)

Channel 15 is meant for broadcasting voice messages between the shore station and the fishing community and also among the fishing boats. Channel 16 is the international calling and distress channel.

The shore station radio equipment is as per the block diagram below.

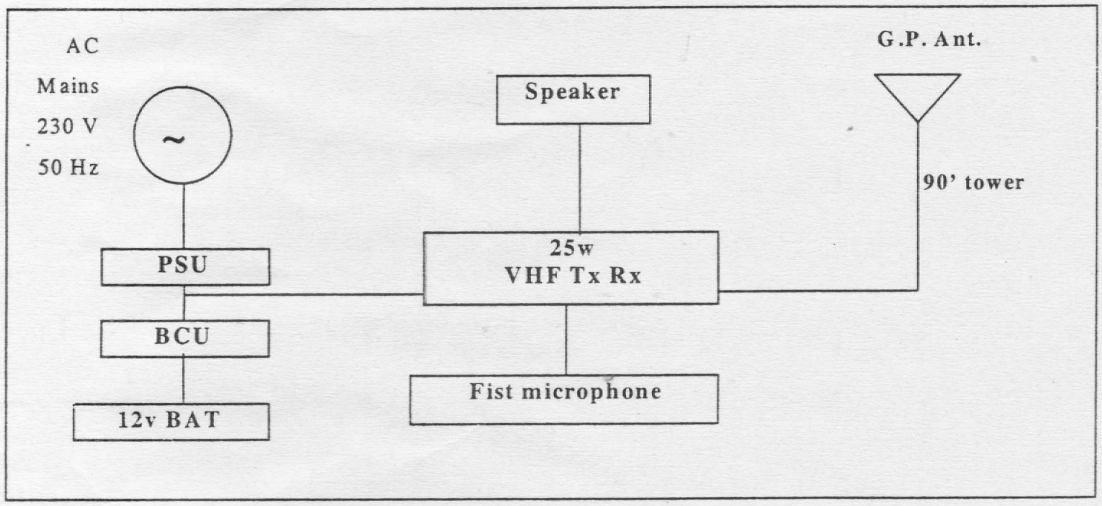

The System consists of:

1. Power supply unit PSU
   230 V AC to 12 V DC
2. Battery changing unit (BCU)
3. 12 V lead acid battery (120AH)
4. 25 W VHF transceiver
5. DC power and audio cable set
6. Speaker with mounting bracket
7. Fist microphone
8. 50 M RF coaxial radio tower
9. 90' lattice grid radio tower
10. 3 GP antenna

The transceivers are connected through a 50 metre. RF coaxial cable to a 3 DB gain GP antenna. The antenna is mounted on top of a 90' lattice radio tower. This is only in order to achieve the maximum range coverage. Since VHF range link functions on line of site basis. The range achieved by these shore stations exceeds 50 km radial distance.

The mechanised fishing vessel radio equipment installation is as per the block diagram below:

The mobile VHF radio system functional block diagram

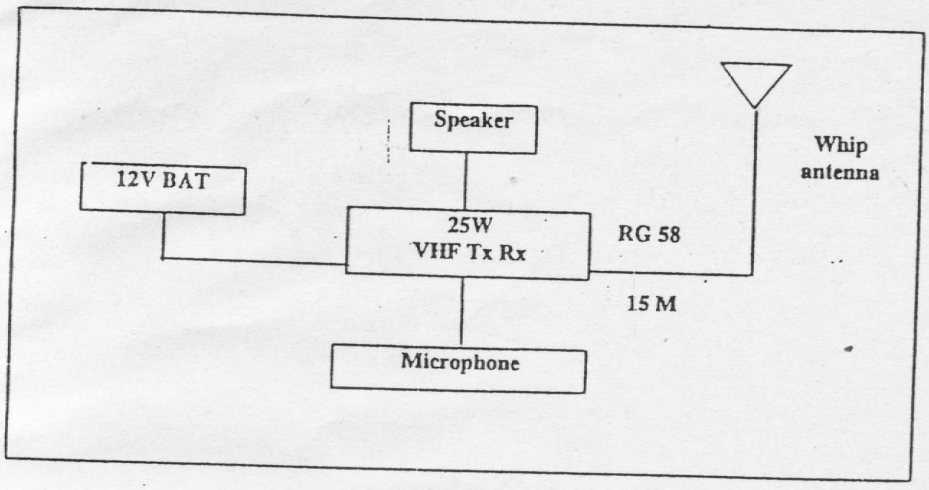

Mobile radio system consists of:

1. 12V lead acid battery
2. 25W VHF radio set
3. Fist microphone
4. Speaker with mounting bracket
5. 15 MRF Coaxial cable RG 58
6. Whip antenna
7. User handbook for boat operators

The 25W VHF radio transceiver powered through the 12V battery available in the boat. The radio set is installed inside the cabin and behind the driver seat. VHF whip antenna is mounted on top of the master pole of the boat which is about 25 above sea level.

Remote village installations: Fixed VHF radio transceivers with 3 dB GP antenna mounted on 15 metre mast are considered for installation in the remote villages on the coastal islands to establish a voice communication link during the cyclone prone periods as a disaster preparedness measure. These radios are to be powered through 12V lead acid batteries as standby power supply. The VHF radio transceivers are frequency modulated and transmission is on simplex mode.

Typical transmission protocol:
The following is a typical communication between the shore station and a boat:

Shore station: Kakinada – "SSK"
Boat FKKD 909 – "909"

Message sequence

Ch 15	SSK	**FKKD 909 Please respond to SSK over**
	909	**909 Responding over**
	SSK	**909 please confirm your position over**
	909	**10 kilometres north of Pentakota over**
	SSK	**Please confirm ETA over**
	909	**Today evening at 1600 hours over**
	SSK	**Thank you and out**

Similar to the above the SSK can transmit weather forecasts on channel 15. All the boat operators use Ch 16 for calling the SSK and also for SOS/emergencies.

Precautions:

1. Do not open the set, unless fully trained.
2. Before switching on the system ensure the installation checks are completed by a trained operator.
3. Do not operate the radio at low voltage. (Keep batteries well charged).
4. Do not expose the radio set to direct sunlight, rain, sand, wind, etc.
5. Do not press the PTT switch of the first microphone without the antenna cable
6. It is recommended that

3 pages